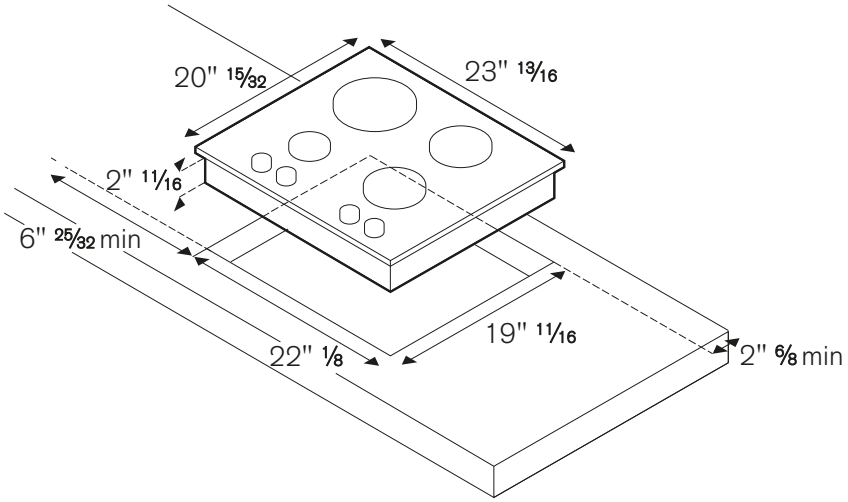
20" 15/32
23" 13/16
2" 11/16
6" 25/32 min
19" 11/16
22" 1/8
2" 6/8 min