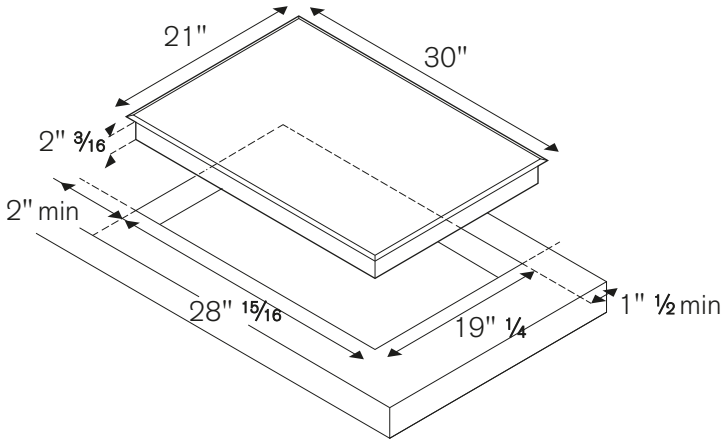
21"
30"
2" 3/16
2" min
28" 15/16
19" 1/4
1" 1/2 min