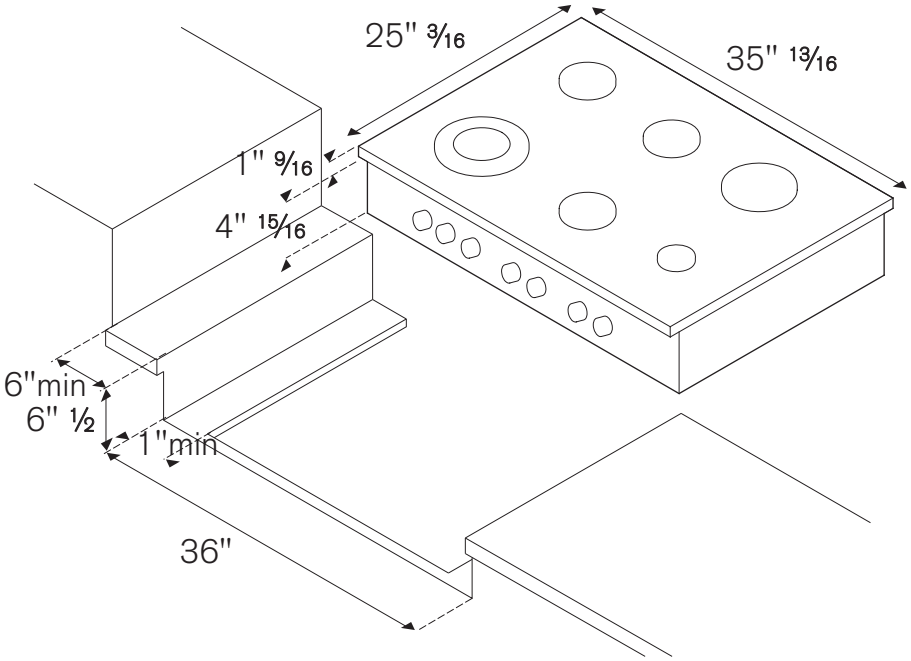
25" 3/16
35" 13/16
1" 9/16
4" 15/16
6"min
6" ½
1"min
36"

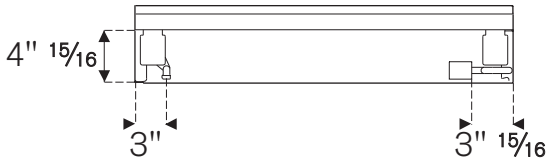
4" 15/16
3"
3" 15/16

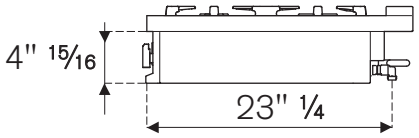
4" 15/16
23" ¼