Technisch document / Technical document Enep XL

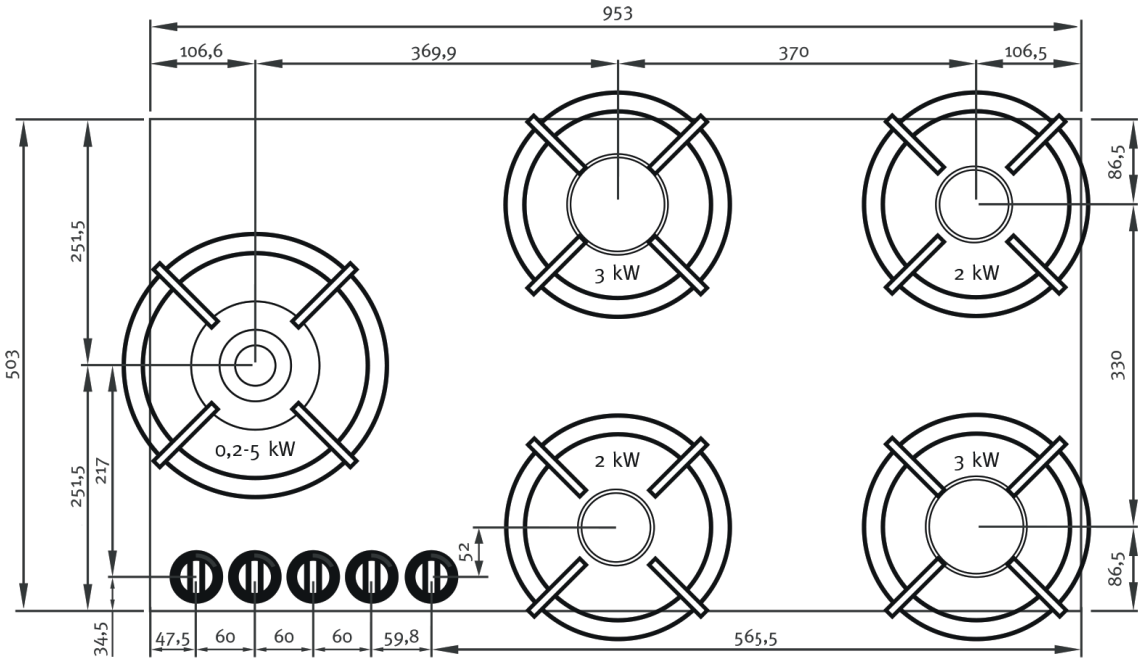

Bovenaanzicht / View from top

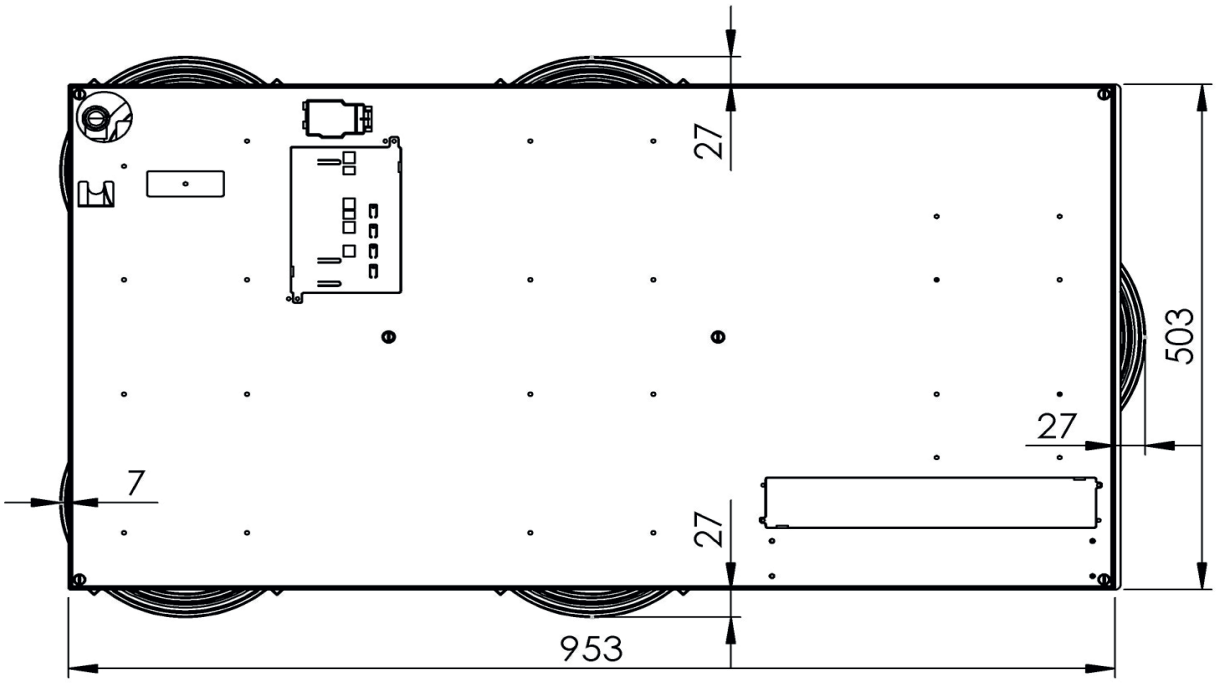

Achteraanzicht / View from back

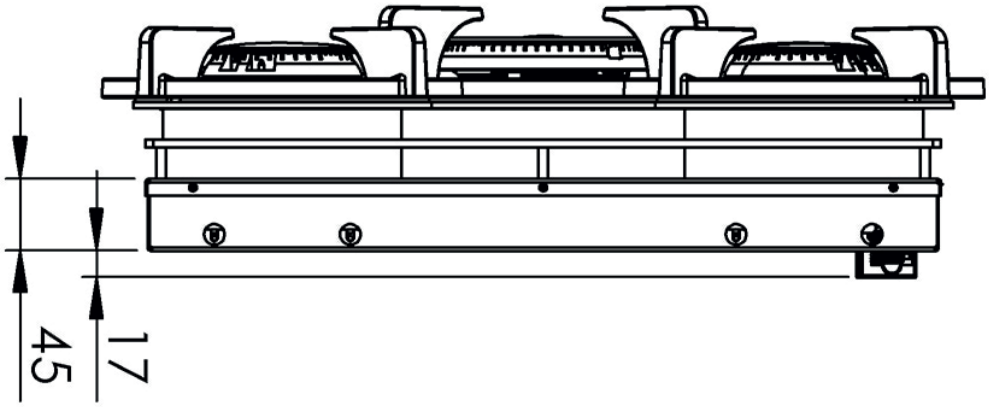

Zij-aanzicht / View from side

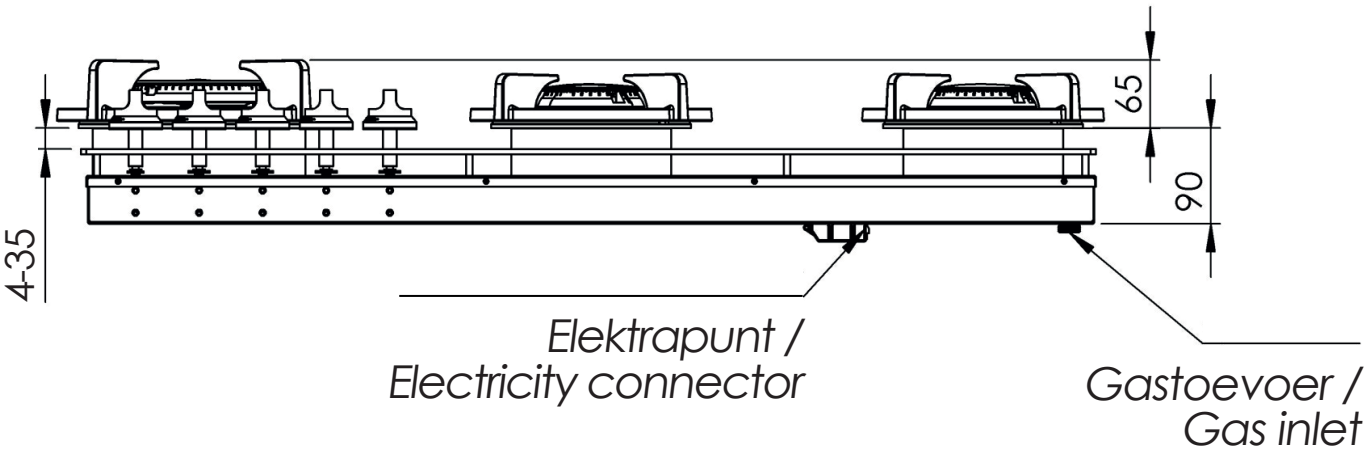

Vooraanzicht / View from front

Technisch document / Technical document Enep XL

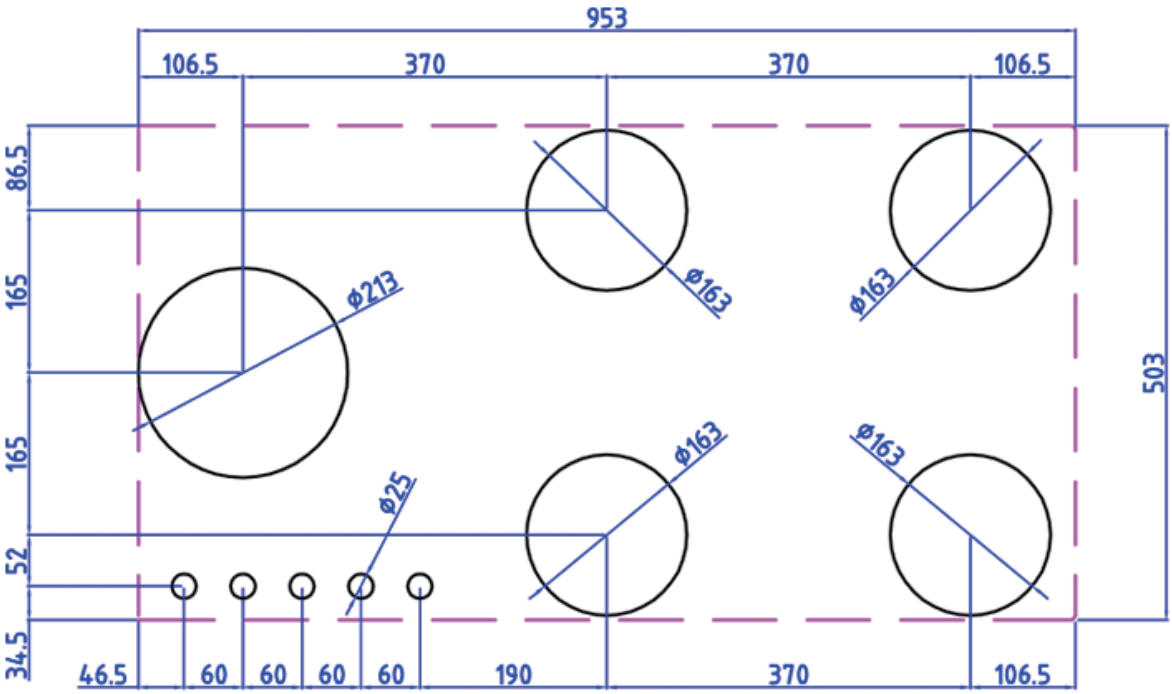

Gatenpatroon / Hole pattern

Gatenpatroon in DXF te downloaden via pittcooking.com
Hole pattern in DXF can be downloaded via pittcooking.com